UNIVERSAL VIDEO HARDWARE SYSTEM

OWNER'S MANUAL

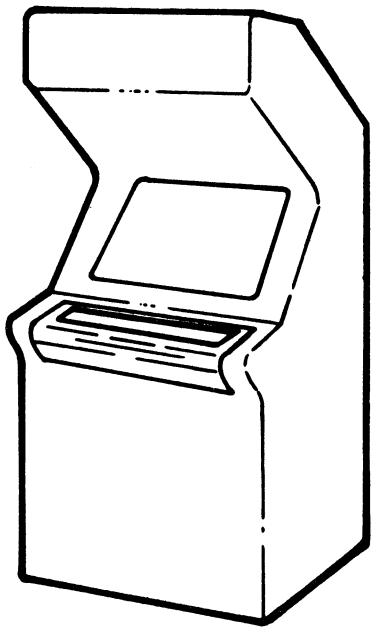

DYNAMO CORPORATION 2525 HANDLEY-EDERVILLE ROAD RICHLAND HILLS/TEXAS 76118
817 - 589-7699 / 800 527-6054 / FAX 817 - 287-7606

UNIVERSAL VIDEO HARDWARE SYSTEM

TABLE OF CONTENTS

	PAGE
Introduction	2
Cabinet Preparation	3
Side Graphic Application	3
Monitor Preparation	3
Universal Control Panel Insert Preparation Method I	5
Universal Control Panel Preparation Method II	7
Control Panel Overlay Application	9
Marquee Preparation & Installation	9
Connector Harness Familiarization	10
Interface Wiring Board	11
Connecting Harness Installation	11
Monitor Conversion Illustration, Figure 1	14
Universal Control Panel Insert Illustration, Figure 2	15
Slide Out Marquee, Figure 2A	16
Universal Panel Insert Assembly Illustration, Figure 3	17
Control Panel Overlay Application Illustration, Figure 4	18
Universal Control Panel Preparation Method II, Figure 4A	19
Connector & Interface Board Illustration, Figure 5	20
Universal System Wiring Diagram, Figure 6	21
Interface Wiring Sample Diagram, Figure 7	22
Tool Inserter, Figure 7A	23
Cabinet Harness & Component Lay-Out, Figure 8	24
Cabinet Ground System Lay-Out, Figure 9	25
Universal Video Wiring Diagram 901-0130	(Insert)

INTRODUCTION

This manual contains step-by-step instructions, wiring diagram, and suggestions to assist you in preparing and producing a professional game.

We urge you to study this manual throughly before you begin the game kit installation.

The Universal Video Game System can be adapted for use to any vertically or horizontally displayed video game. The cabinet is shipped to you in a vertical display mode.

The card edge connector harness provides additional wires to the control panel for multiple joystick and push button controls installation.

Additional spare parts are available through your local Dynamo Corporation distributor.

CABINET PREPARATION:

Cabinet side panels should be throughly cleaned before applying the game kit side graphics.

SIDE GRAPHIC APPLICATION:

Spray a mild soap and water solution to the cabinet area where the side graphics are to be applied.

Remove the protective backing from the decals.

Position decals into place.

With a soft squeegee, and starting from the center of the decal, slowly press out excess soap solution until a smooth finish is achieved.

Allow to dry, two to three hours, before handling.

MONITOR PREPARATION:

Determine video display system of game to be installed and position monitor accordingly.

For monitor position changes refer to illustration Figure 1 found in this manual.

CONTROL PANEL PREPARATION:

Control panels may be prepared by two different methods called methods I and II.

Method I allows you to cover the control panel with a universal wrap, and then only change control panel inserts when a game is converted The insert can be prepared and wired on the bench with no drilling of any kind necessary, and later installed on the control panel.

Method II requires that you install the insert on the control panel first, then cover the entire panel with the wrap supplied by the kit supplier. Next you mark a plexiglass overlay, drill out for appropriate controls, screw down the plexiglass, then install controls. With method II, you must have a complete control panel from the game or a spare complete control panel for preparation.

METHOD I

UNIVERSAL CONTROL PANEL INSERT PREPARATION

Refer to Figures two and three for illustrations.

Removal of the main control panel from the cabinet is NOT necessary to perform a game kit installation.

Included with the Dynamo system is a universal control panel insert. See Figure 2.

1. This insert can be used for selecting almost existing control configurations. Blank inserts are also available for universal control configurations, but must be drilled.

2. Spray metal insert using 3M "77" adhesive.

3. Apply thick black lexan covering to control panel insert.

4. Using a sharp "Exacto" knife, cut out holes in lexan that are selected to be used for controls.

5. Apply button and joystick decals to the insert by peeling backing and applying where desired. Be sure decals are positioned (approx 3/8") to allow room for button placement over the die-cut area.

METHOD I CONT.

6. Using "3M" #77 spray adhesive, and holding can approximately 18 inches away, spray a light mist once over decals and lexan. Place clear lexan overlay over decals and smooth surface out with hand.

7. With an Xactro knife again carefully cut lexan around button and joystick placements at the same holes previously cut.

8. Install buttons and joystick controls on covered panel insert.

9. Attach wire harness terminals to button and joystick controls.

10. Install insert to main control panel of cabinet and connect insert harness to main harness connector.

Tie down harness and excess wiring.

METHOD II

UNIVERSAL CONTROL PANEL PREPARATION

Refer to Figure 4A for illustrations.

1. Install universal control panel insert into control panel.

2. Cover entire panel with control panel covering supplied with kit; following kit instructions.

3. Using "Exacto" knife, cut out selected holes in covering wrap for control configuration selected.

4. Apply button and joystick decals to the covered insert by peeling backing and applying where desired. Be sure decals are positioned (approx 3/8") to allow room for button placement over the die-cut-area.

5. Lay 1/8" plexiglass overlay on panel and mark holes selected, then drill holes in plexiglass to correspond with holes selected for controls.

6. Drill (6) 5/16" dia mounting holes.

7. Bolt plexiglass covering to control panel as shown in Fig. 4A use (6) #10-24 carriage bolts.

METHOD II CONTINUED

8. Install buttons and joystick controls on panel through holes selected.

9. Attach wire harness terminals to button and joystick controls and insert harness connector to main harness connector.

UNIVERSAL CONTROL PANEL OVERLAY APPLICATION

Refer to illustration, Figure 4.

To apply, slowly remove backing from overlay as you apply it to the control panel surface. Be sure all air pockets are removed.

Using an X-Acto knife, cut a window on the overlay where the insert is to be mounted. For the overlay to be fold over, the window must be made from an inch away around the edge of the panel. Refer to Figure 4.

Cut slots on the overlay for each of the 8 panel screws.

Make cuts on the overlay at an angle to each corner.

Fold overlay cut-out over control panel surface.

Install panel insert on control panel.

MARQUEE PREPARATION:

The game kit marquee may need to be cut to fit our cabinet. If your game kit contains a mylar marquee overlay, slowly remove backing as you apply it to a clear plexiglass marquee panel that is cut to fit this cabinet.

MARQUEE PREPARATION CONT.:

Gently trim excess around the edges with an X-Acto knife.

If a plexiglass marquee is supplied with your game kit it may need to be cut to fit the cabinet. Do not remove the protective masking until this is done. Be sure to protect the silk-screened side of the marquee from any surface which may mark or scratch the finish.

Marquee may be cut by using a scribing knife or a sturdy craft knife. Using as a guide the clear marquee plexi, place the clear panel over the marquee and hold firmly in place. Draw the scriber several times along the clear panel edge using firm even pressure.

Hold the marquee rigidly under a straight edge with the scribed mark hanging just over the edge of a table. Using a cloth to protect your hands, apply an even sharp downward pressure to break the marquee along the scratched mark. Smooth all corners and sharp edges.

If marquee is soft vinyl, then cut vinyl to fit using clear marquee plex supplied with system cabinet as a pattern. Then put the soft vinyl marquee behind the clear plex.

CONNECTOR HARNESS FAMILIARIZATION:

The mose commonly known errors made during conversion, are in wire connections and edge connector insertion. It is therefore, of the utmost importance to throughly study the edge connector pin configuration, so that mistakes NOT be made during wire hook up.

CONNECTING HARNESS INSTALLATION:

Take a pair of wire cutters and cut the kit harness wires at an even length approximately nine inches from the card edge connector. Using the manual provided with the kit, select the wire for each function and insert the wire into the connector as described in the proceeding paragraph. For example, if the wire on pin 7 of the kit harness is "one player start", insert that wire into the connector on the interface board marked "1 player start", etc.

The 36 pin molex connector harness of the control panel was designed to allow bench assembly of the panel insert. The control panel harness is equipped with 20 non-designated, and 12 ground push-on terminals to accommodate a variaty of applications. Do not cut any wire on the control panel, this would destroy the system for future use.

A word of caution when connecting the black wires of the game harness. These wires are DC ground and are not to be confused and connected to the black wires of the cabinet A.C. circuit. Black wires in an A.C. circuit are "HOT" and carry a dangerous potential of 120 volts, white is "NEUTRAL" and green identifies earth ground.

The black ground wires should be attached to the interface board connectors labelled "ground". Do not insert the interface or game boards into the edge connectors until all wires have been connected and throughly tested to each

terminating point. Illustration of cabinet's ground system, harness and component lay-out are on Figures 8 and 9.

MONITOR CONVERSION

VERT. TO HORZ.
&
HORZ. TO VERT.

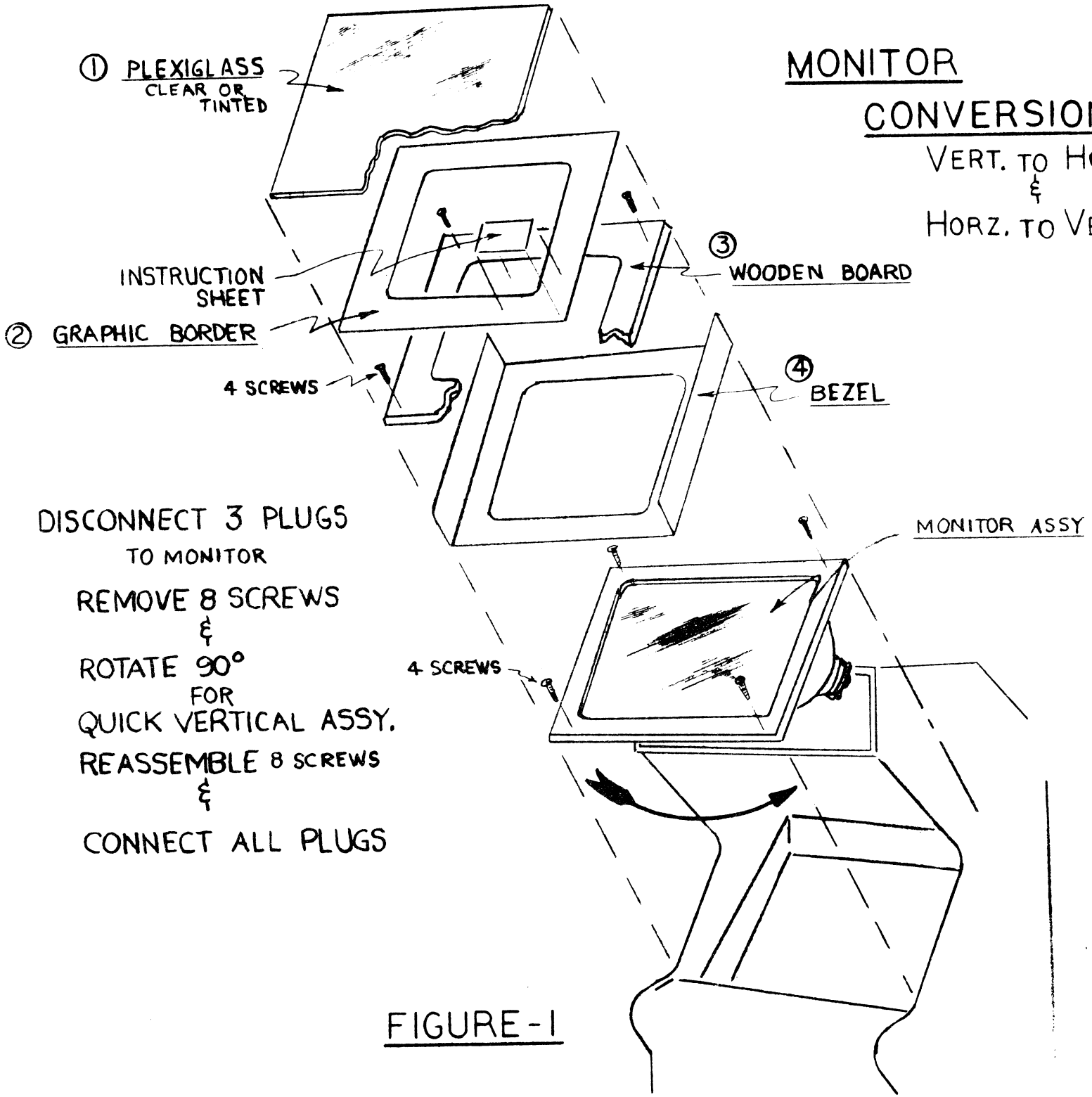

DISCONNECT 3 PLUGS
TO MONITOR

REMOVE 8 SCREWS
&
ROTATE 90°
FOR
QUICK VERTICAL ASSY.

REASSEMBLE 8 SCREWS
&
CONNECT ALL PLUGS

FIGURE-1

UNIVERSAL CONTROL PANEL INSERT

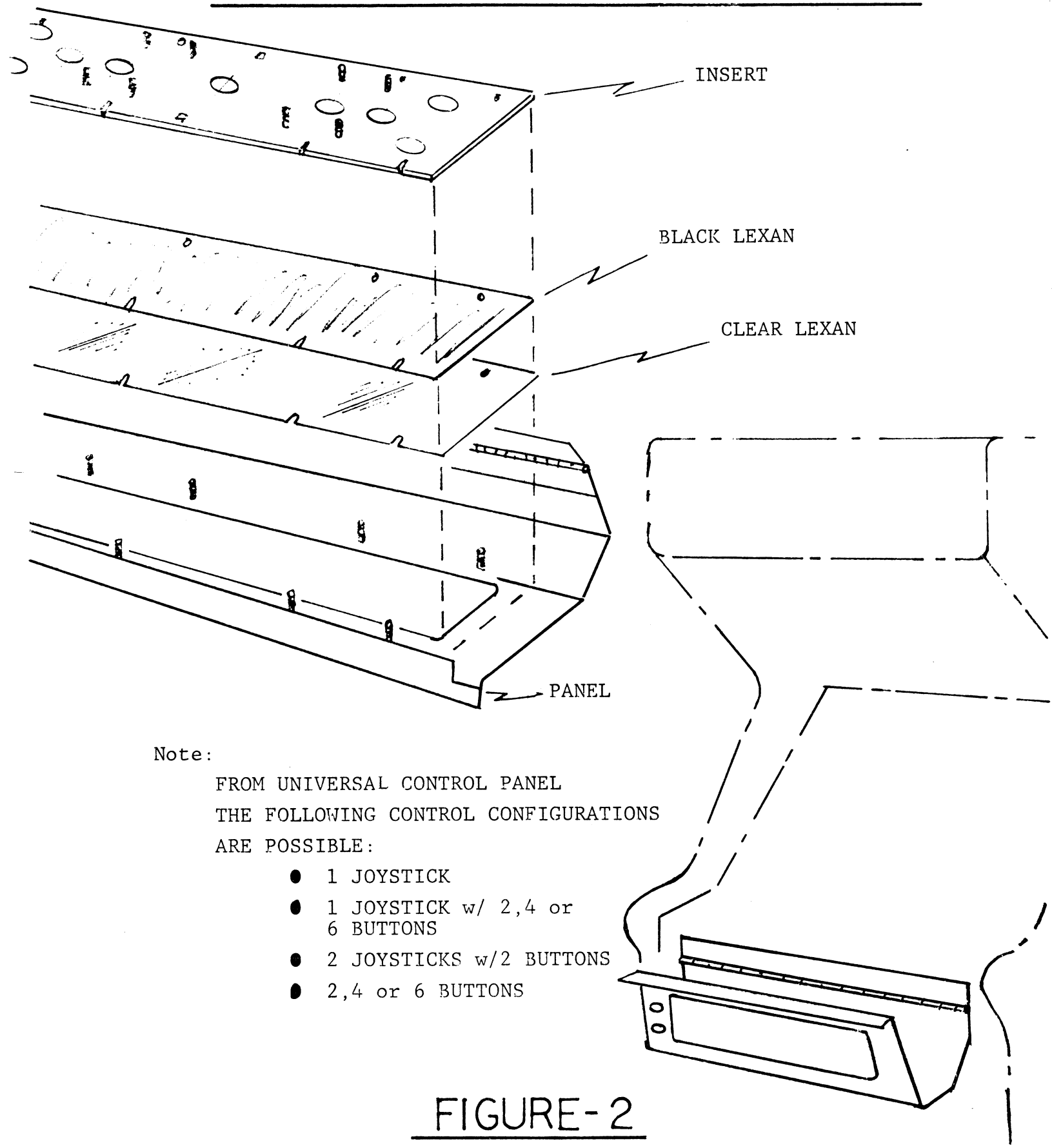

Note:

FROM UNIVERSAL CONTROL PANEL
THE FOLLOWING CONTROL CONFIGURATIONS
ARE POSSIBLE:

- 1 JOYSTICK
- 1 JOYSTICK w/ 2,4 or 6 BUTTONS
- 2 JOYSTICKS w/2 BUTTONS
- 2,4 or 6 BUTTONS

FIGURE-2

SLIDE OUT MARQUEE

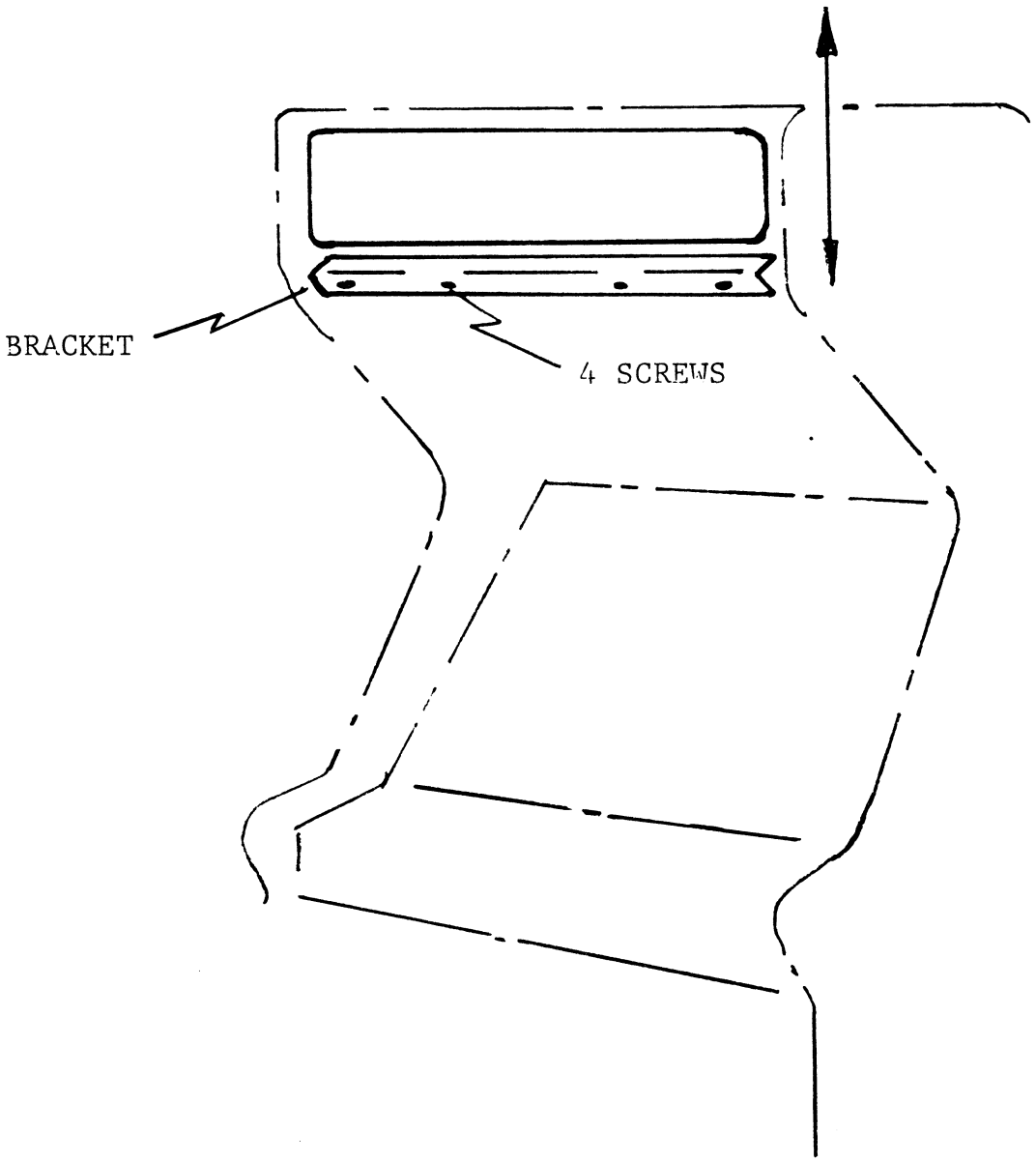

FIGURE-2A

UNIVERSAL CONTROL PANEL INSERT

PREPARATION METHOD - I

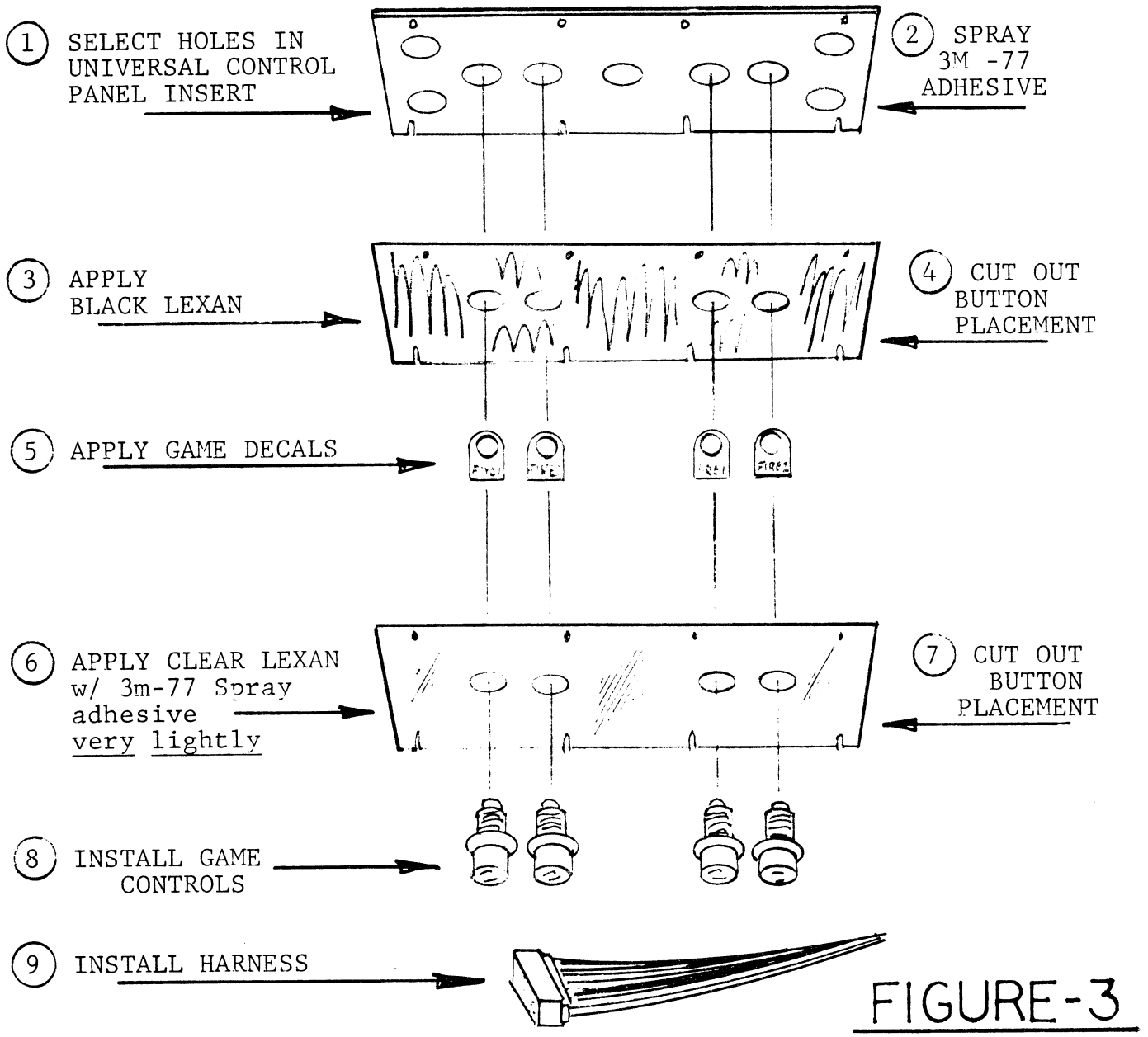

FIGURE-3

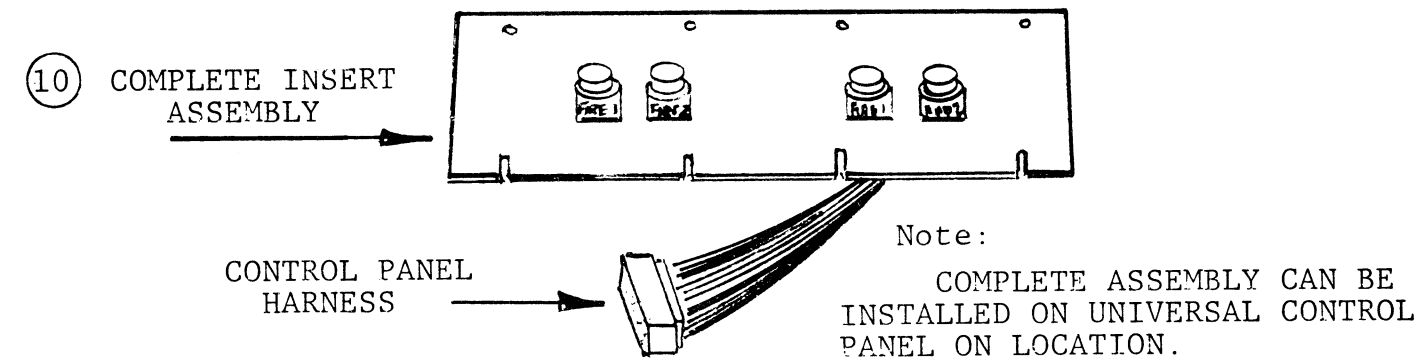

Note:

COMPLETE ASSEMBLY CAN BE INSTALLED ON UNIVERSAL CONTROL PANEL ON LOCATION.

CONTROL PANEL

OVERLAY APPLICATION

METHOD II

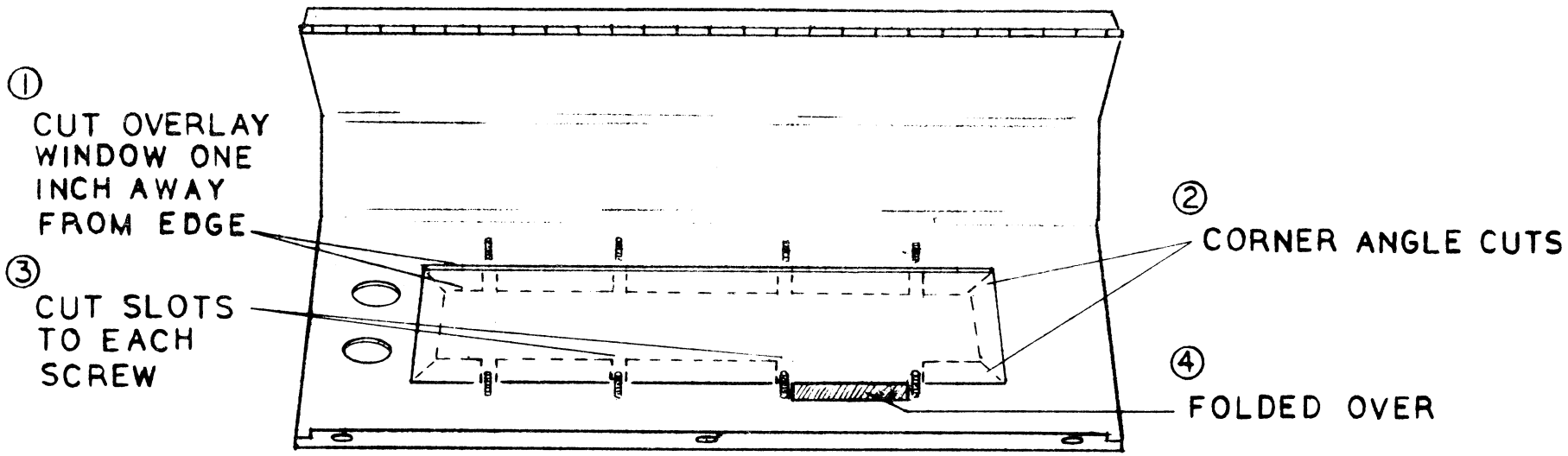

FIGURE-4

UNIVERSAL
CONTROL PANEL INSERT
PREPARATION METHOD-II

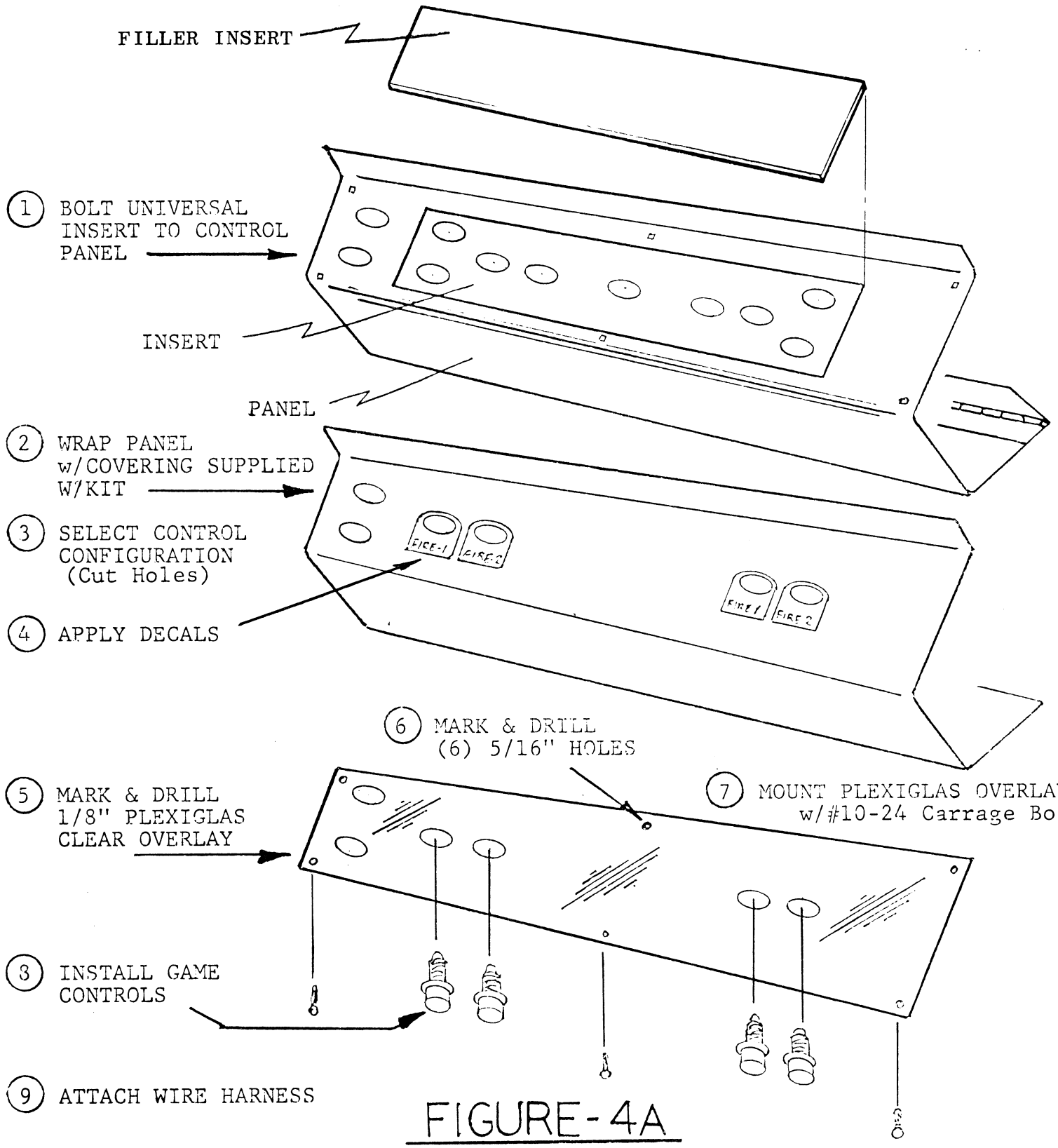

FIGURE-4A

UNIVERSAL VIDEO HARDWARE

EDGE CONNECTOR PIN CONFIGURATION SYSTEM

28	27	26	25	24	23	22	21	20	19	18	17	16	15	14	13	12	11	10	9	8	7	6	5	4	3	2	1
F̄	Ē	D̄	C̄	B̄	Ā	Z	Y	X	W	V	U	T	S	R	P	N	M	L	K	J	H	F	E	D	C	B	A

5A

INTERFACE WIRING BOARD

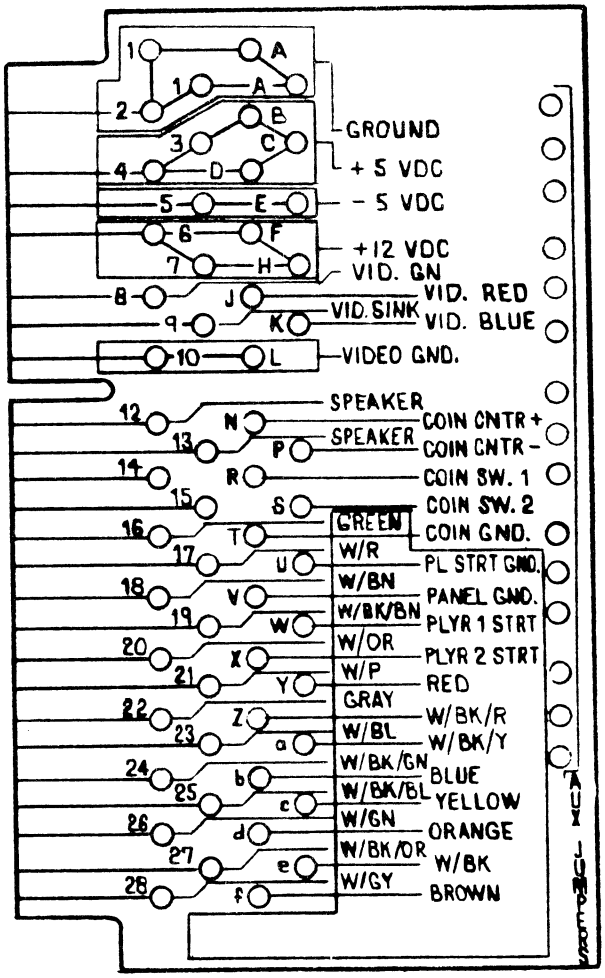

FIGURE-5

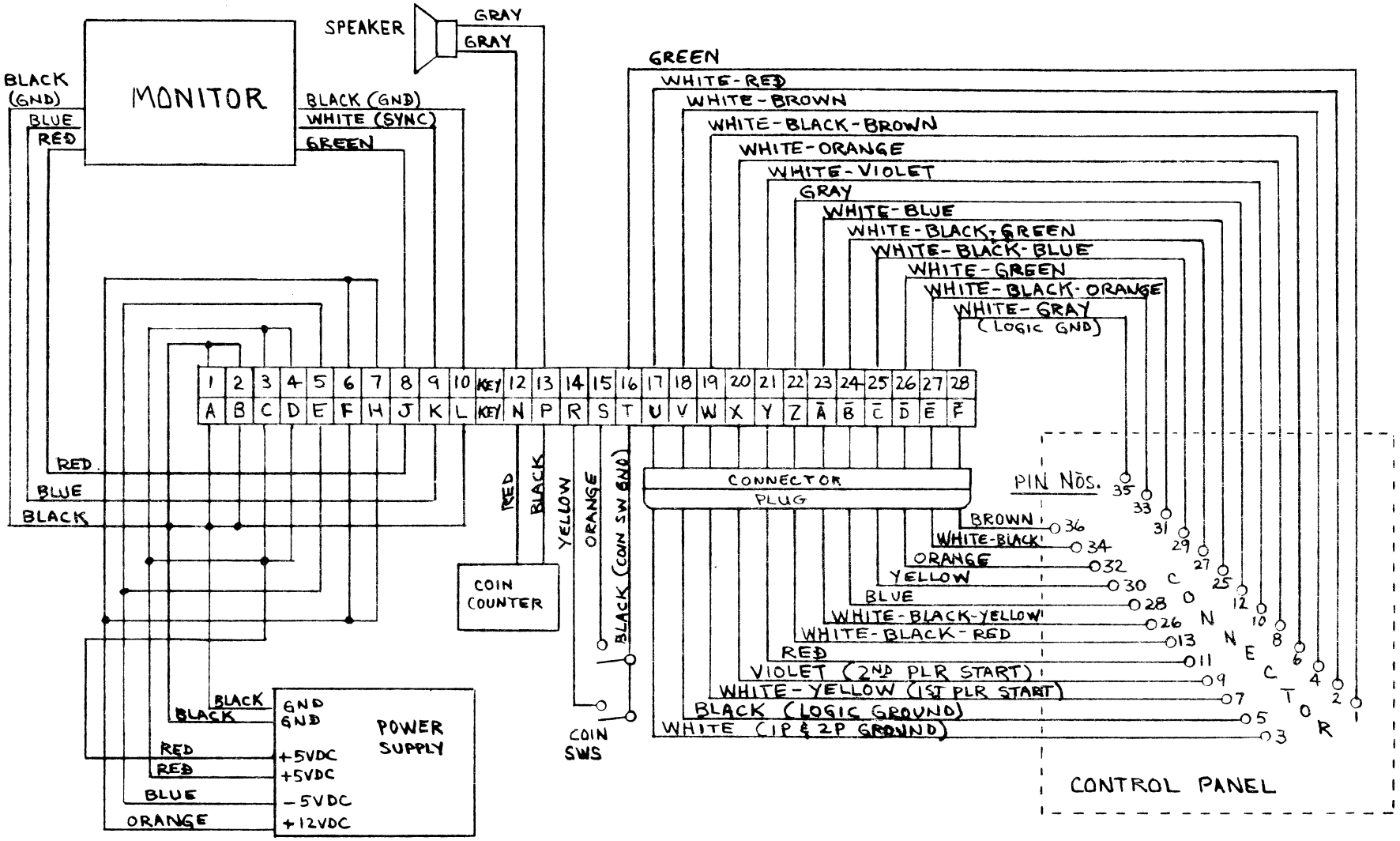

UNIVERSAL VIDEO SYSTEM WIRING DIAGRAM

FIGURE -6

INTERFACE WIRING SAMPLE

YOUR GAME KIT EDGE CONNECTOR AND WIRE HARNESS

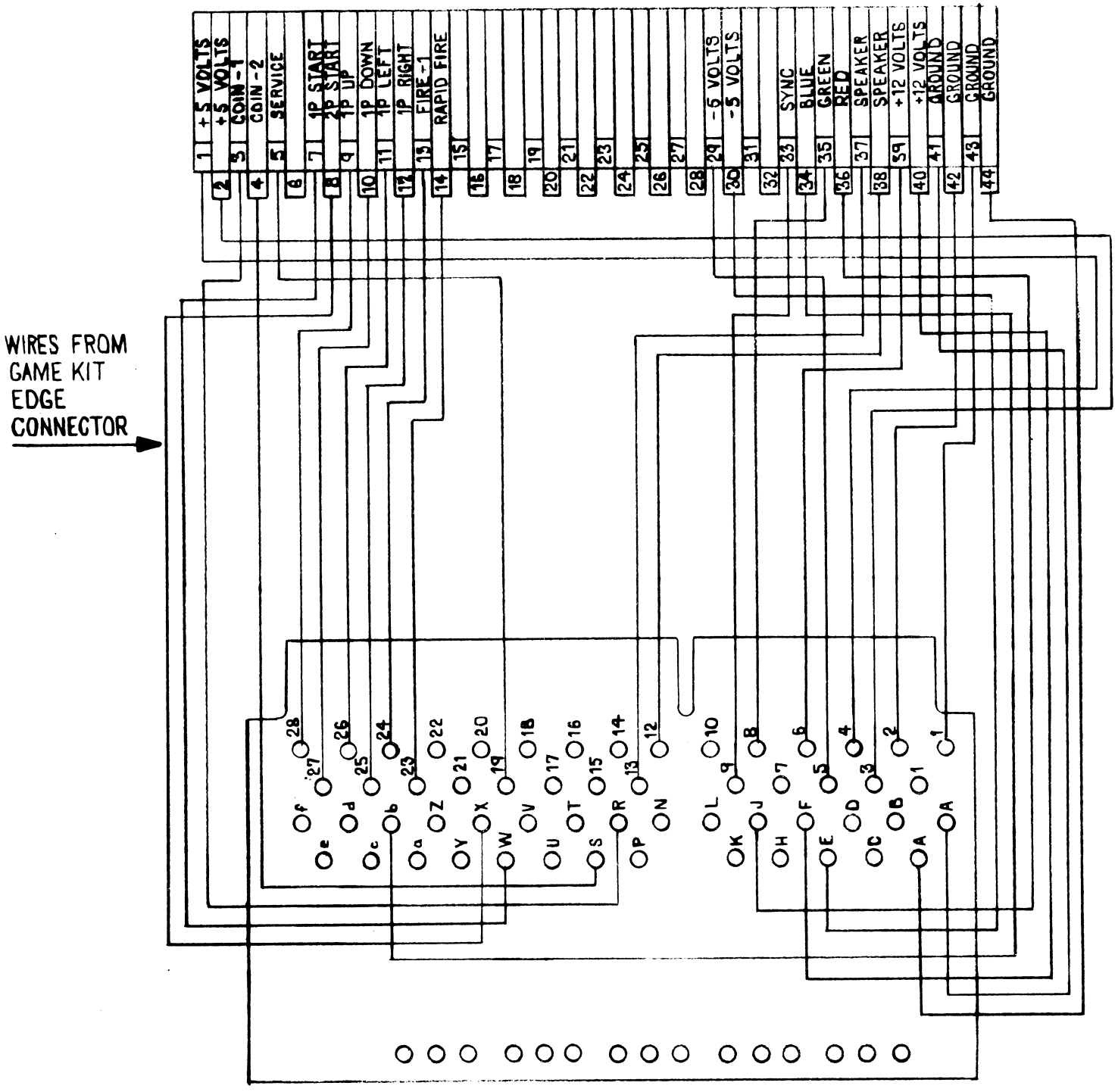

FIGURE -7

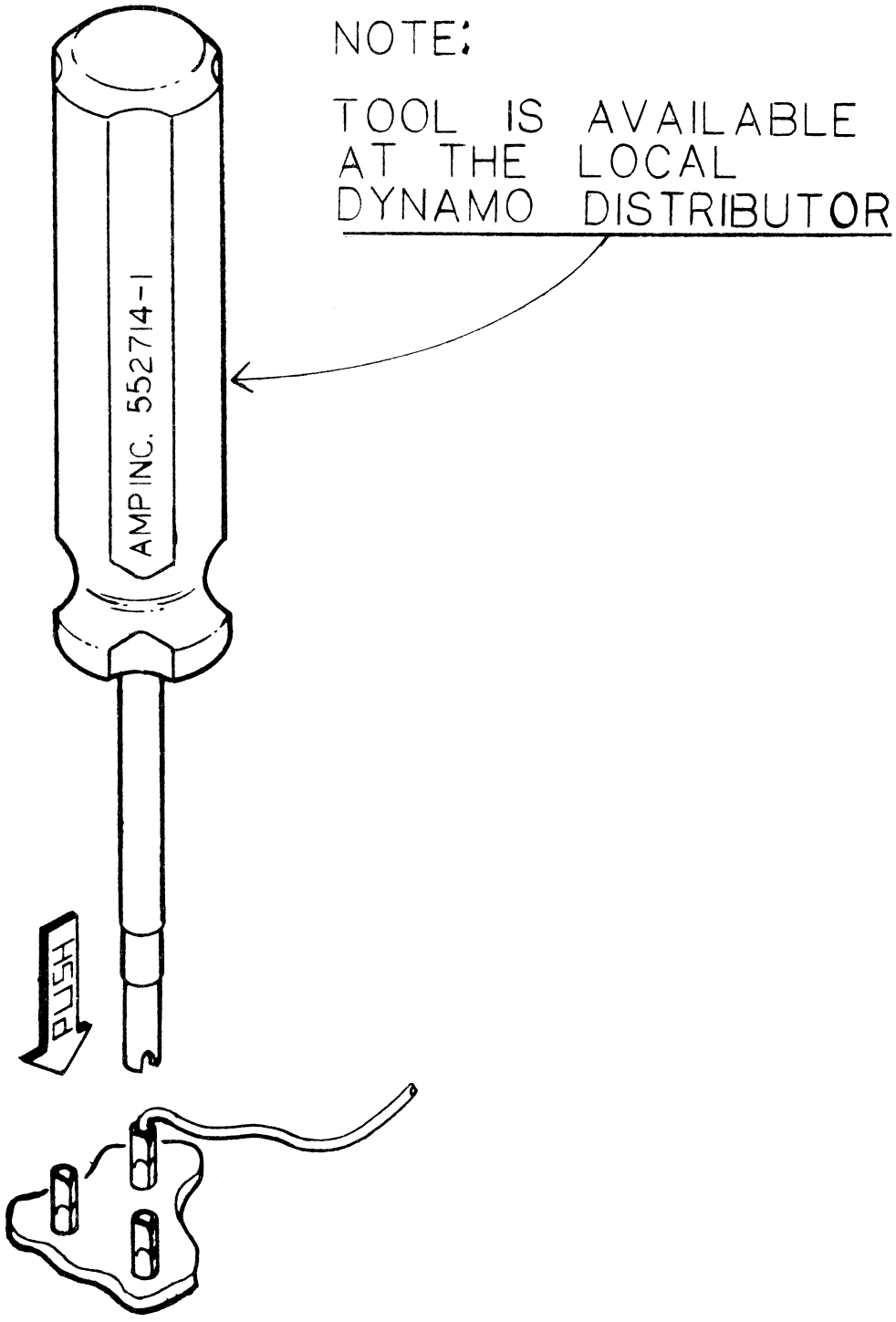
NOTE:
TOOL IS AVAILABLE AT THE LOCAL DYNAMO DISTRIBUTOR
AMP INC. 552714-1
PUSH

FIGURE 7A

FIGURE -8

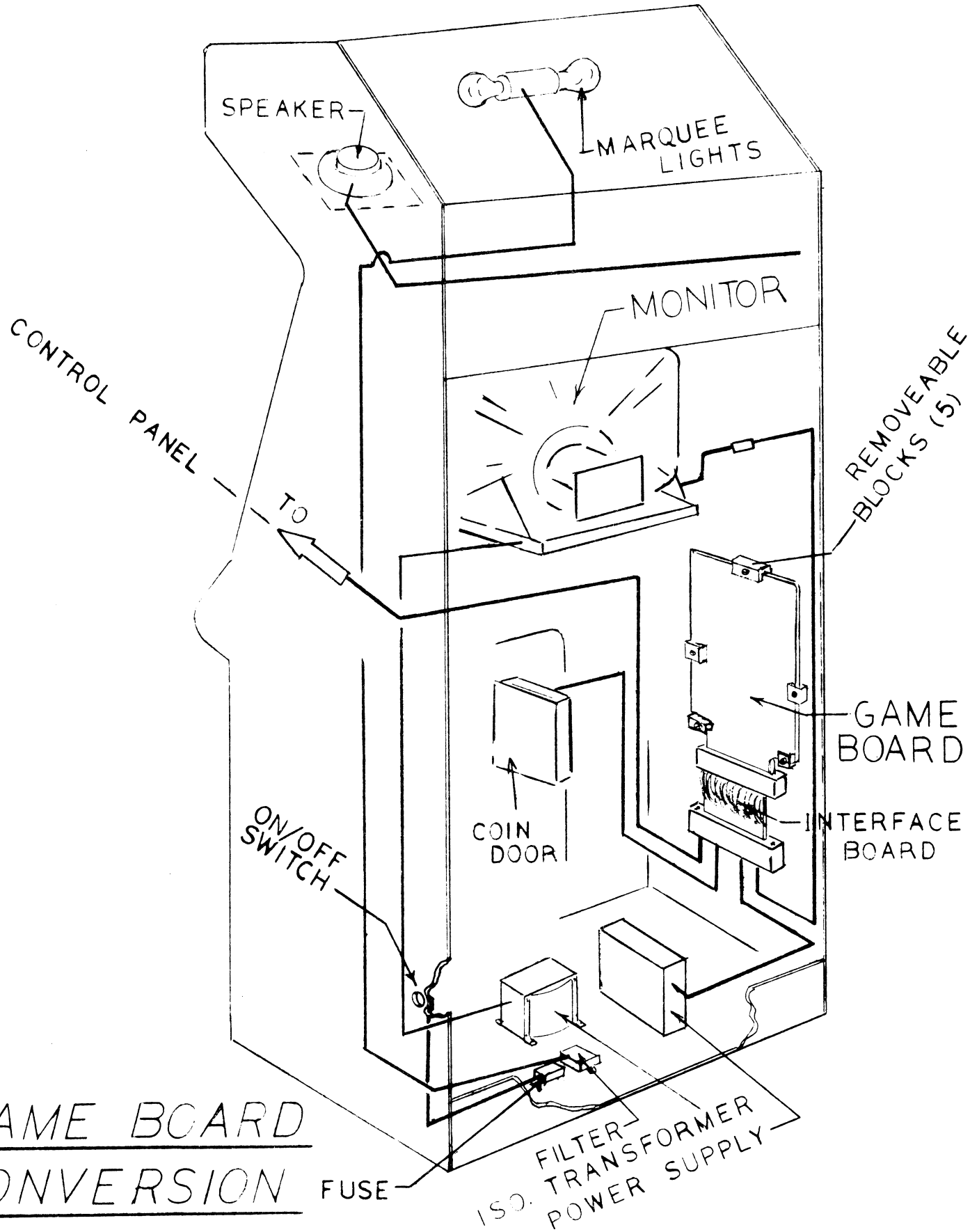

GAME BOARD CONVERSION WITH HARNESS & COMPONENT LAYOUT

FIGURE-9

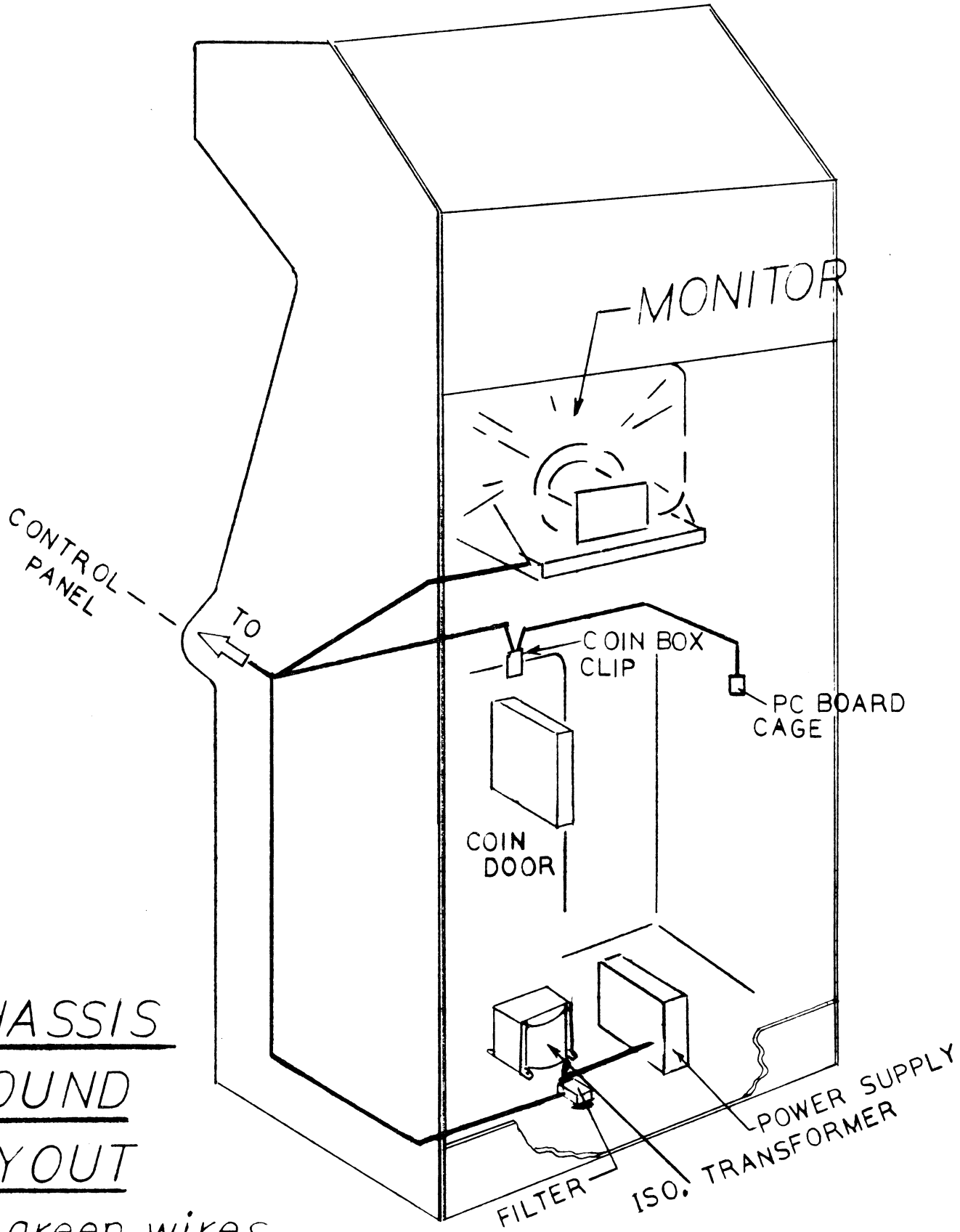

CHASSIS GROUND LAYOUT

green wires from filter